Thiele Technologies

Streamfeeder PRODUCT LINE

Specialty Applications

Model ST-1250 Vacuum Transport

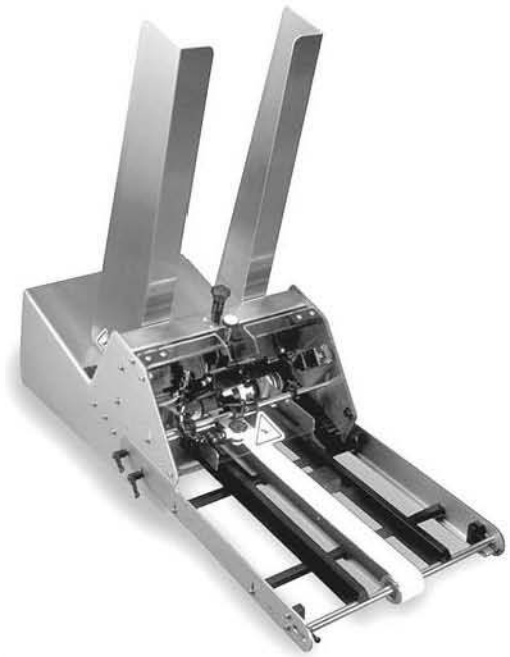

A sampling of the products that can be fed.

Overview:

Designed for secondary inline operations. It creates an open space on the carriage for adding equipment such as bar code readers, date stamps and more. In addition, the vacuum belt feature can provide improved product stabilization by utilizing a vacuum generator or a vacuum blower.

Applications:

- Bar Codes
- Date Stamps
- Cards
- Labels
- Product Inserts
- Envelopes
- Flat Cartons

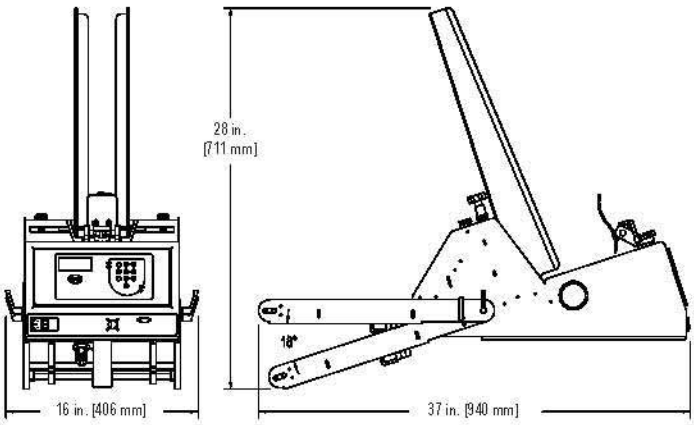

Specifications

Maximum Product Size: ..... 8.5 W x 11 L in (215.9 x 279.4 mm)*
Minimum Product Size: ..... 3.75 W x 3.75 L in (95.25 x 95.25 mm)*
Optional: ..... 2 W x 2.5 L in (50.8 x 63.5 mm)*
Min/Max Product Thickness: ..... .003-1.0 in (.076-25.4 mm)*
Belt Speed: ..... 5500 in/min (140,000 mm/min)
Electrical Requirements: 115/230vac, 50/60Hz, 6A
Air Requirements:
Vacuum Generator: ..... 4 CFM @ 90 PSI
Vacuum Blower: 115/230vac, 50/60Hz, 5.6/2.0A
Weight: ..... 89 lbs. (40.367kg)
Warranty: ..... One-year limited
*Contact us for product sample evaluation

Packin Srl

Via Pavia 23/F - 20835 Muggiò (MB) Italy T. +39 039 792537 F. +39 039 792537 www.packin.it info@packin.it